ML12079
2.8 GHz Prescaler
MECL PLL Components
÷64/128/256 Prescaler

Legacy Device: *Motorola MC12079*

The ML12079 is a single modulus divide by 64, 128, 256 prescaler for low power frequency division of a 2.8 GHz (typical) high frequency input signal. Divide ratio control inputs SW1 and SW2 select the required divide ratio of ÷64, ÷128, or ÷256.

An external load resistor is required to terminate the output. A 1.2 kΩ resistor is recommended to achieve a 1.6 V_{pp} output swing, when dividing a 1.1 GHz input signal by the minimum divide ratio of 64, assuming a 12 pF load. Output current can be minimized dependent on conditions such as output frequency, capacitive load being driven, and output voltage swing required. Typical values for load resistors are included in the V_{out} specification for various divide ratios at 2.8 GHz input frequency.

- 2.8 GHz Toggle Frequency
- Supply Voltage 4.5 to 5.5 V
- Low Supply Current 9mA Typical at V_{CC} = 5.0 V
- Operating Temperature Range of T_A = –40 to 85°C

SO 8 = -5P
PLASTIC PACKAGE
CASE 751

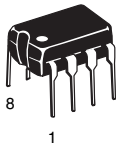

P DIP 8 = PP
PLASTIC PACKAGE
CASE 626

CROSS REFERENCE/ORDERING INFORMATION

PACKAGE	MOTOROLA	LANSDALE
P DIP 8	MC12079P	ML12079PP
SO 8	MC12079D	ML12079-5P

Note: Lansdale lead free (**Pb**) product, as it becomes available, will be identified by a part number prefix change from **ML** to **MLE**.

FUNCTIONAL TABLE

SW1	SW2	Divide Ratio
H	H	64
H	L	128
L	H	128
L	L	256

NOTE: SW1 & SW2: H = V_{CC}, L = Open.

MAXIMUM RATINGS

Characteristic	Symbol	Range	Unit
Power Supply Voltage, Pin 2	V_{CC}	–0.5 to 7.0	Vdc
Operating Temperature Range	T_A	–40 to 85	°C
Storage Temperature Range	T_{stg}	–65 to 150	°C
Maximum Output Current, Pin 4	I_O	4.0	mA

PIN CONNECTIONS

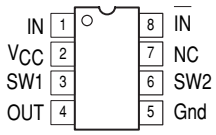

(Top View)

ELECTRICAL CHARACTERISTICS (V_{CC} = 4.5 to 5.5 V; T_A = –40 to 85°C, unless otherwise noted.)

Parameter	Symbol	Min	Typ	Max	Unit
Toggle Frequency (Sine Wave)	ft	0.25	3.4	2.8	GHz
Supply Current Output (Pin 2)	I_{CC}	–	9.0	11.5	mA
Input Voltage Sensitivity 250–500 MHz 500–2800 MHz	V_{in}	400 100	– –	1000 1000	mVpp
Divide Ratio Control Input High (SW)	V_{IH}	V_{CC}	V_{CC}	V_{CC}	V
Divide Ratio Control Input Low (SW)	V_{IL}	Open	Open	Open	–
Output Voltage Swing (C_L = 12 pF; R_L = 1.2 kΩ; I_O = 2.7 mA)[1] (C_L = 12 pF; R_L = 2.2 kΩ; I_O = 1.5 mA)[2] (C_L = 12 pF; R_L = 3.9 kΩ; I_O = 0.85 mA)[3]	V_{out}	1.0	1.6	–	V_{pp}

NOTES: 1. Divide ratio of ÷64 at 2.8 GHz.
2. Divide ratio of ÷128 at 2.8 GHz.
3. Divide ratio of ÷256 at 2.8 GHz.

Figure 1. Logic Diagram (ML12079)

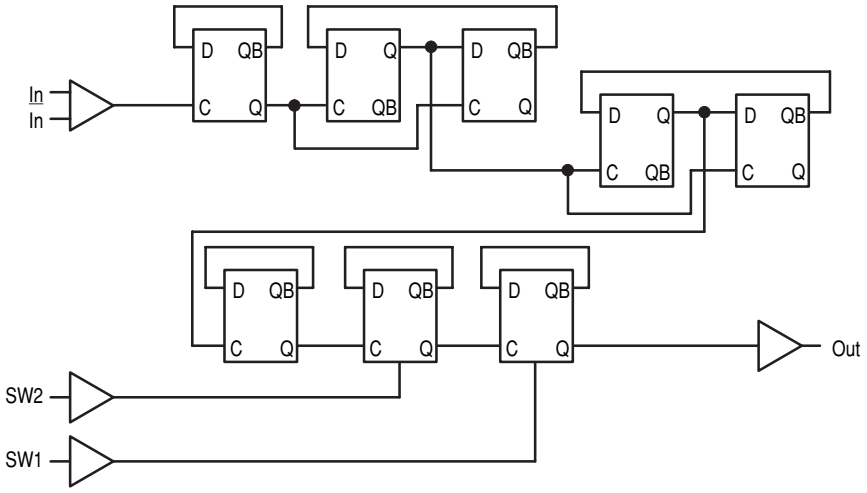

Figure 2. AC Test Circuit

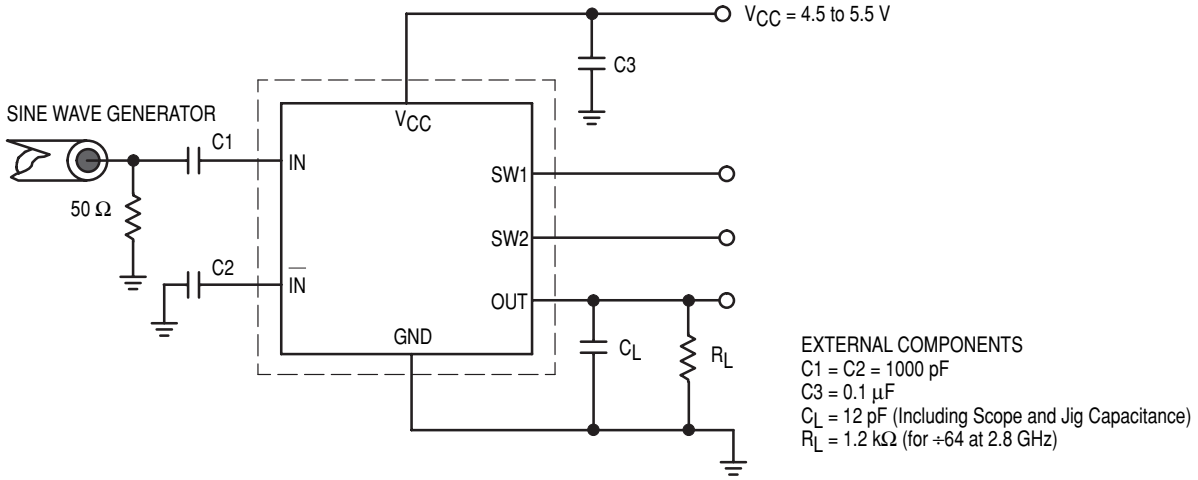

Figure 3. Input Signal Amplitude versus Input Frequency

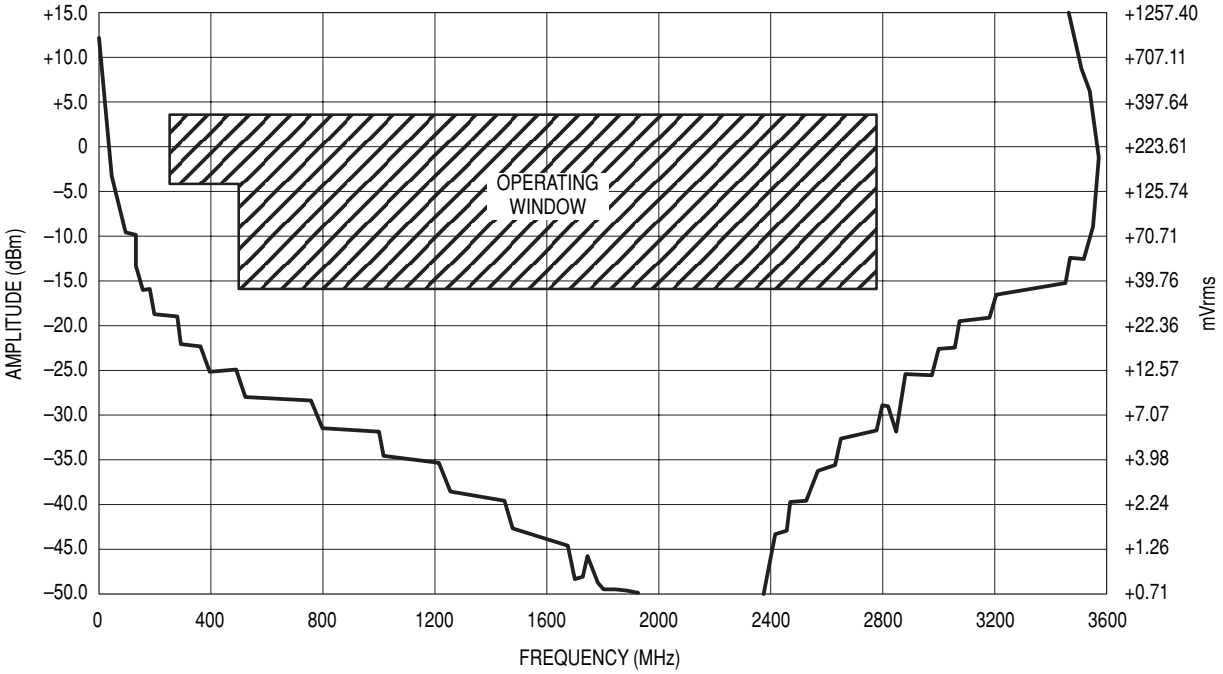

Divide Ratio = 64; V_{CC} = 5.0 V; T_A = 25°C

Figure 4. Output Amplitude versus Input Frequency

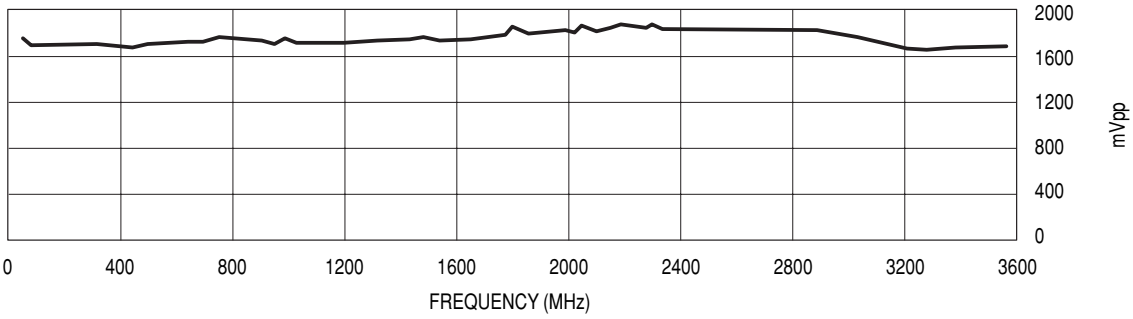

OUTLINE DIMENSIONS

P DIP 8 = PP
PLASTIC PACKAGE
(ML12079PP)
CASE 626–05
ISSUE K

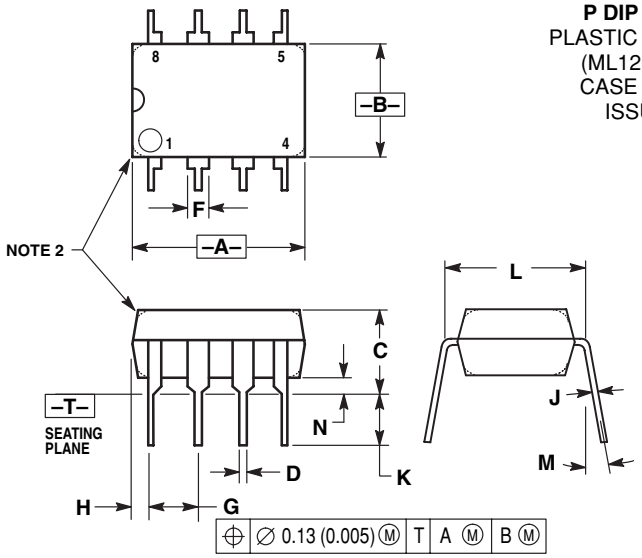

NOTES:
1. DIMENSION L TO CENTER OF LEAD WHEN FORMED PARALLEL.
2. PACKAGE CONTOUR OPTIONAL (ROUND OR SQUARE CORNERS).
3. DIMENSIONING AND TOLERANCING PER ANSI Y14.5M, 1982.

	MILLIMETERS		INCHES	
DIM	MIN	MAX	MIN	MAX
A	9.40	10.16	0.370	0.400
B	6.10	6.60	0.240	0.260
C	3.94	4.45	0.155	0.175
D	0.38	0.51	0.015	0.020
F	1.02	1.78	0.040	0.070
G	2.54 BSC		0.100 BSC	
H	0.76	1.27	0.030	0.050
J	0.20	0.30	0.008	0.012
K	2.92	3.43	0.115	0.135
L	7.62 BSC		0.300 BSC	
M	—	10°	—	10°
N	0.76	1.01	0.030	0.040

SO 8 = -5P
PLASTIC PACKAGE
(ML12079-5P)
CASE 751–06
ISSUE T

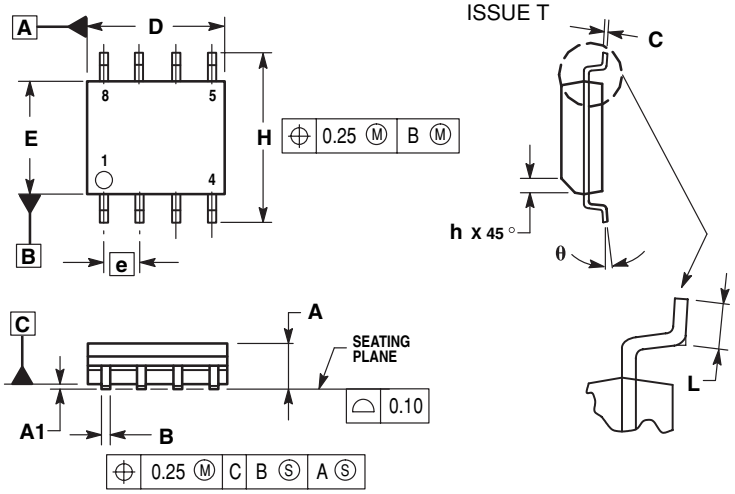

NOTES:
1. DIMENSIONING AND TOLERANCING PER ASME Y14.5M, 1994.
2. DIMENSIONS ARE IN MILLIMETER.
3. DIMENSION D AND E DO NOT INCLUDE MOLD PROTRUSION.
4. MAXIMUM MOLD PROTRUSION 0.15 PER SIDE.
5. DIMENSION B DOES NOT INCLUDE DAMBAR PROTRUSION. ALLOWABLE DAMBAR PROTRUSION SHALL BE 0.127 TOTAL IN EXCESS OF THE B DIMENSION AT MAXIMUM MATERIAL CONDITION.

	MILLIMETERS	
DIM	MIN	MAX
A	1.35	1.75
A1	0.10	0.25
B	0.35	0.49
C	0.19	0.25
D	4.80	5.00
E	3.80	4.00
e	1.27 BSC	
H	5.80	6.20
h	0.25	0.50
L	0.40	1.25
θ	0°	7°